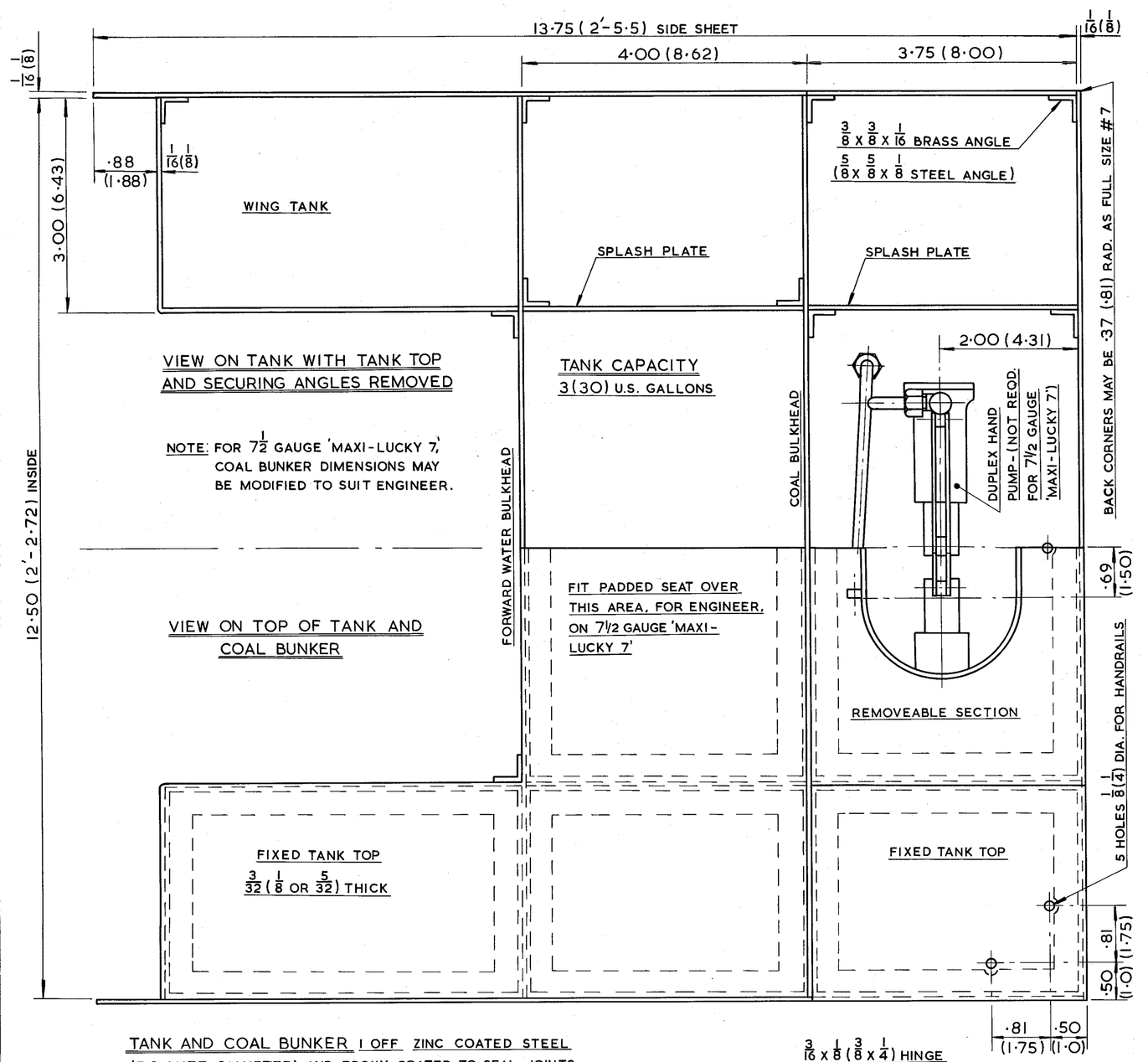

TANK AND COAL BUNKER 1 OFF ZINC COATED STEEL (E.C. MATT GALVETITE) AND EPOXY COATED TO SEAL JOINTS

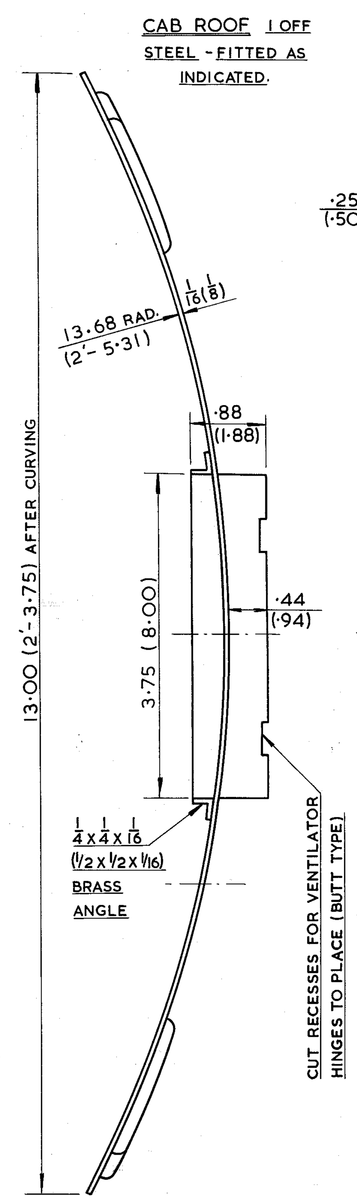

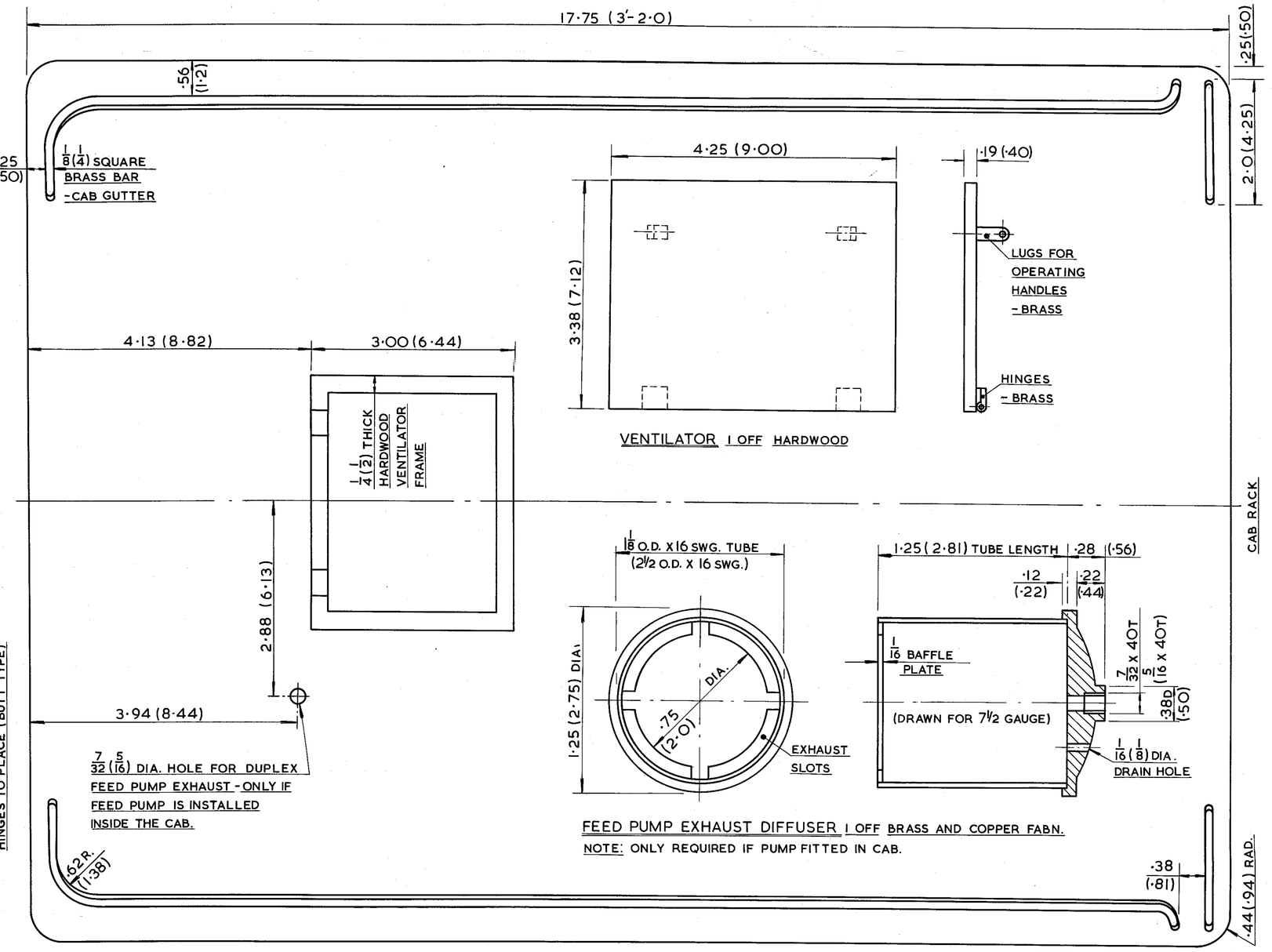

FEED PUMP EXHAUST DIFFUSER 1 OFF BRASS AND COPPER FABN.
NOTE: ONLY REQUIRED IF PUMP FITTED IN CAB.

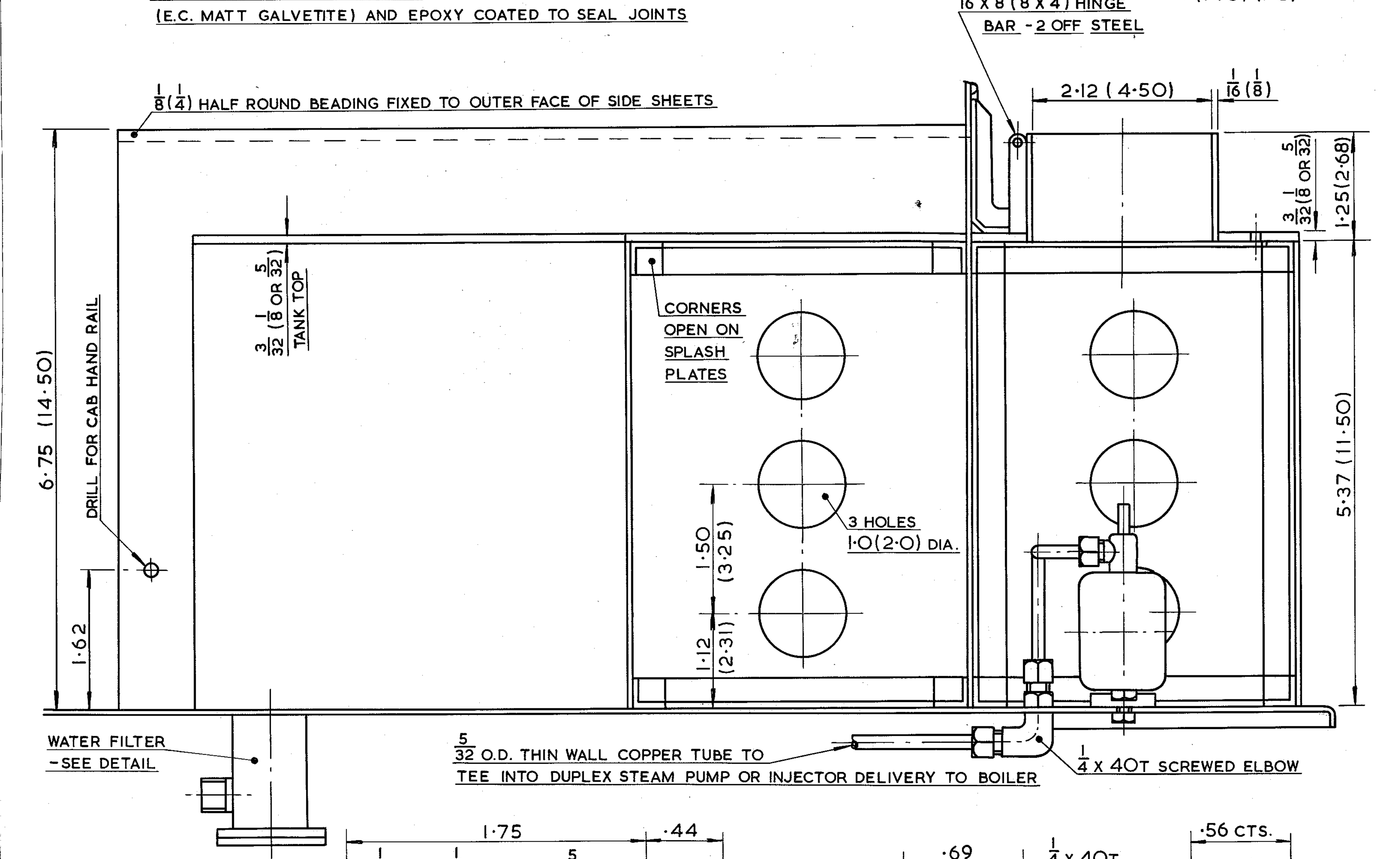

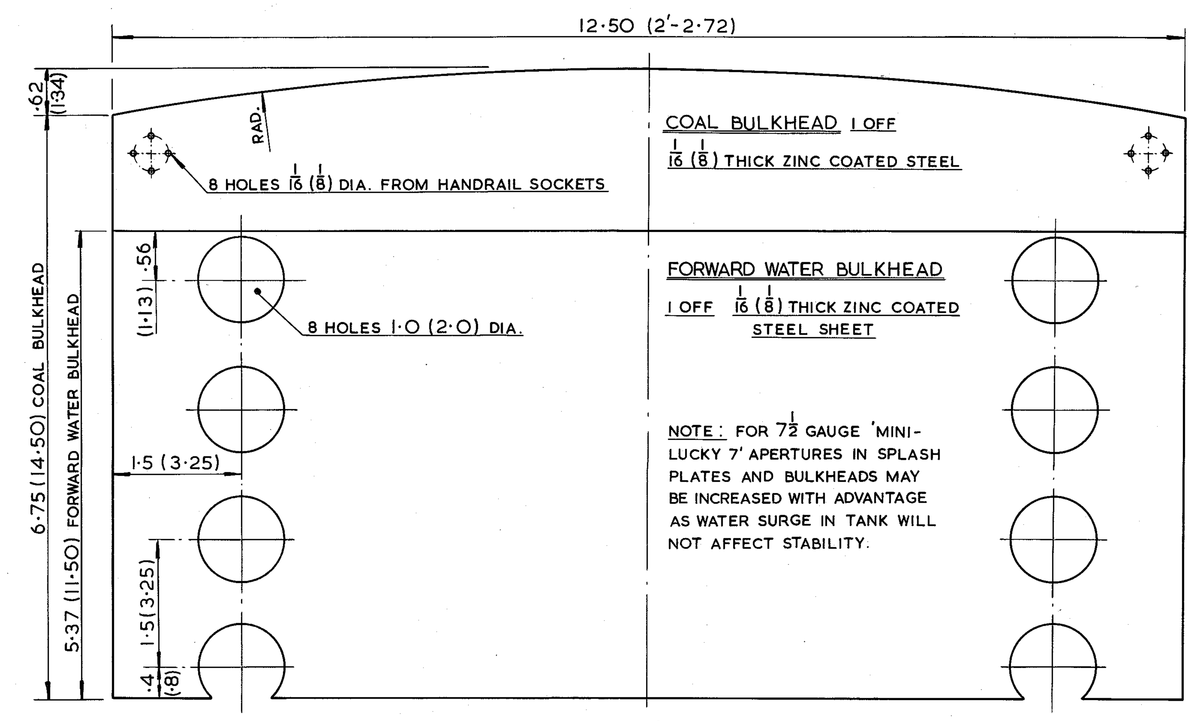

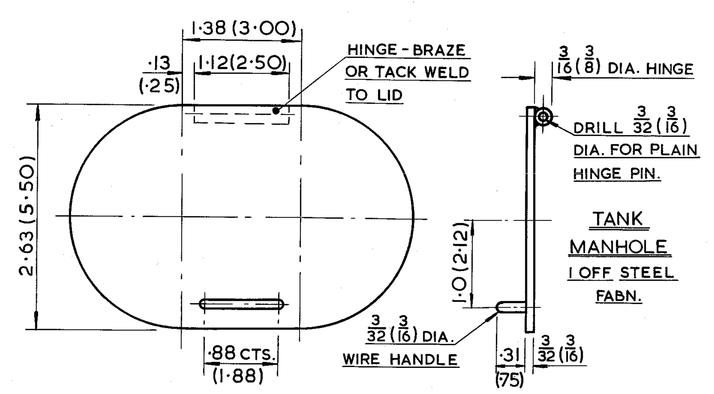

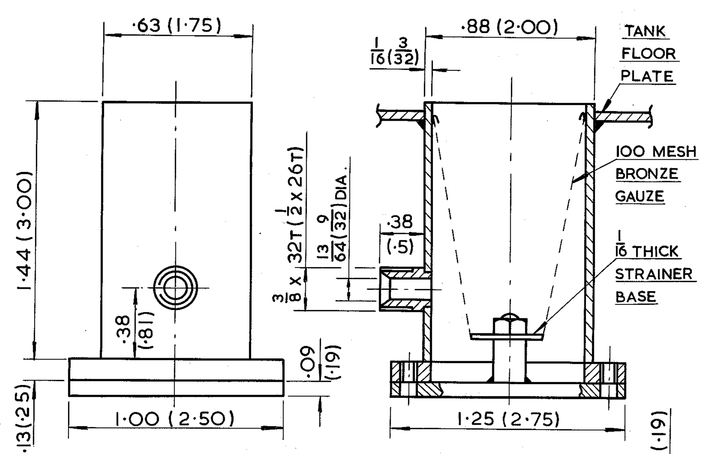

FEED WATER SUCTION STRAINER 2 OFF ZINC COATED STEEL - BRONZE FITTED

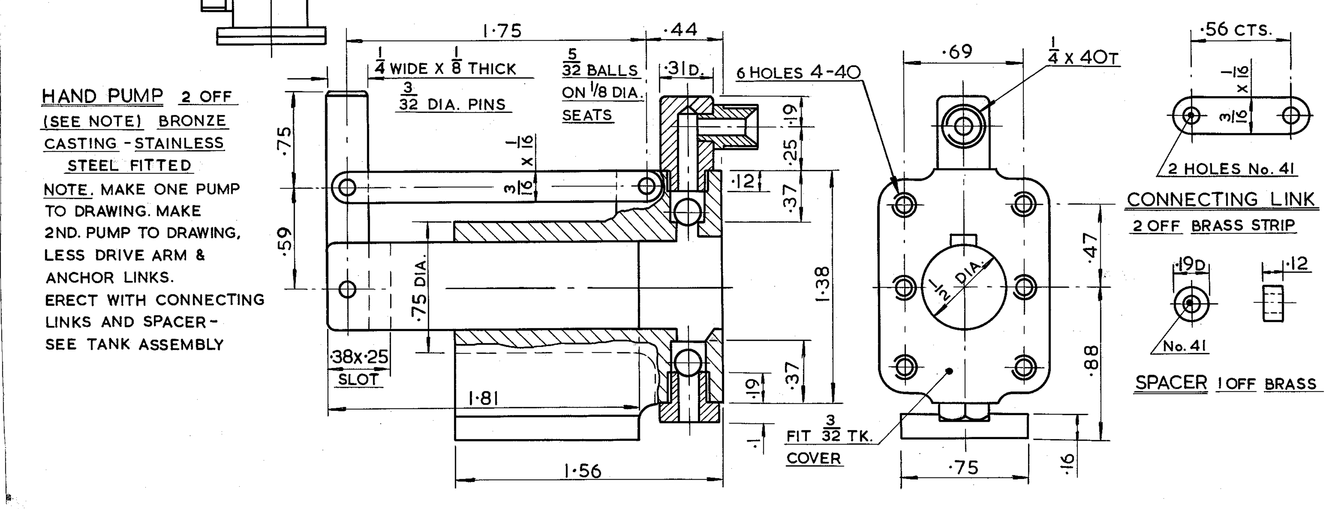

HAND PUMP 2 OFF (SEE NOTE) BRONZE CASTING - STAINLESS STEEL FITTED

NOTE. MAKE ONE PUMP TO DRAWING. MAKE 2ND. PUMP TO DRAWING, LESS DRIVE ARM & ANCHOR LINKS. ERECT WITH CONNECTING LINKS AND SPACER - SEE TANK ASSEMBLY

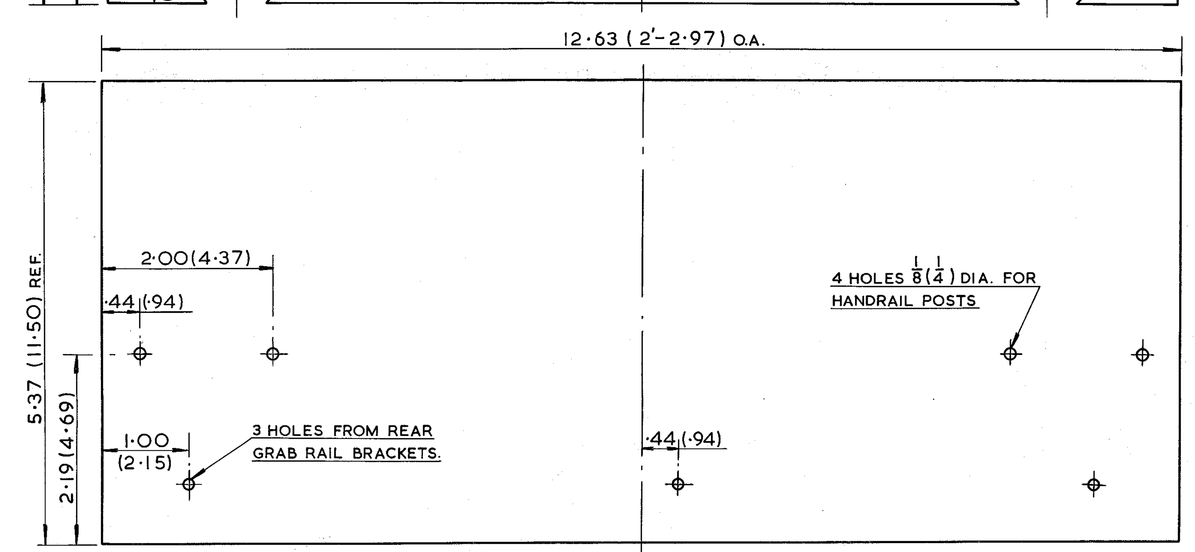

TANK REAR SHEET DRILLING DETAILS

SCALE	DESCRIPTION	DRG. No.
FULL & TWICE FULL SIZE	TANK AND COAL BUNKER, HAND PUMP; CAB ROOF & VENTILATOR FOR B & H # 7	18
GAUGE 3 1/2 (7 1/2)	DESIGNED BY: DON YOUNG © 1976	